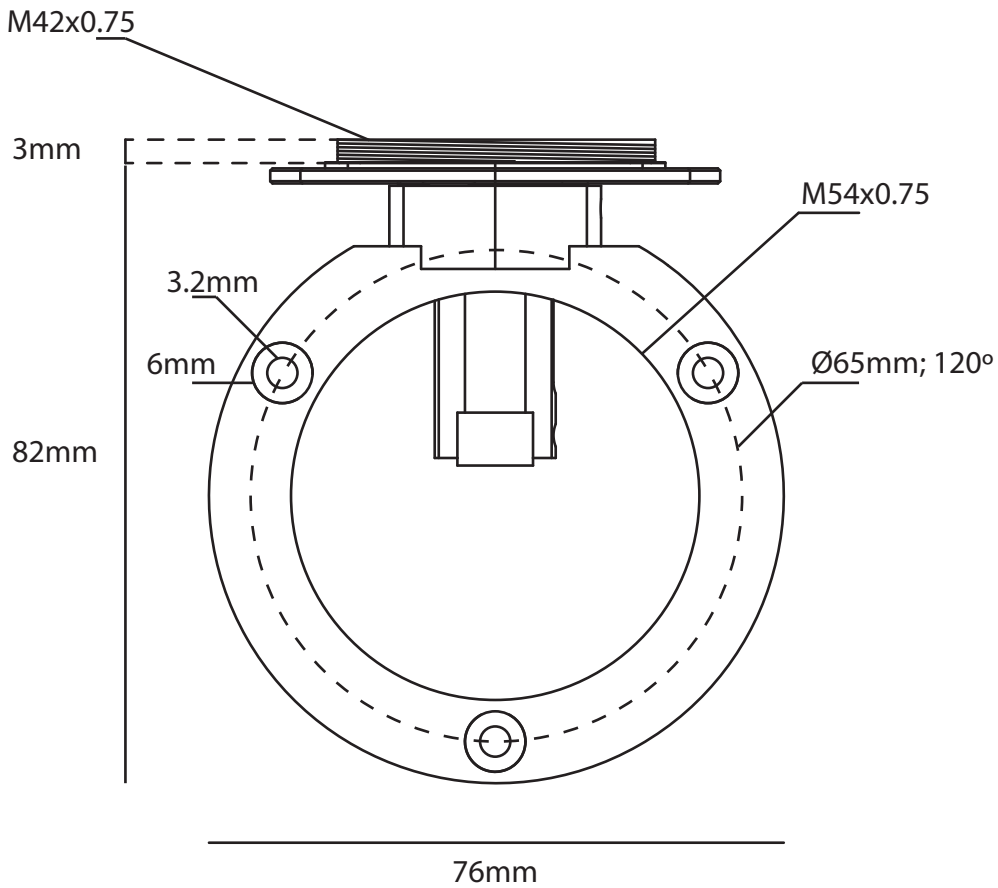

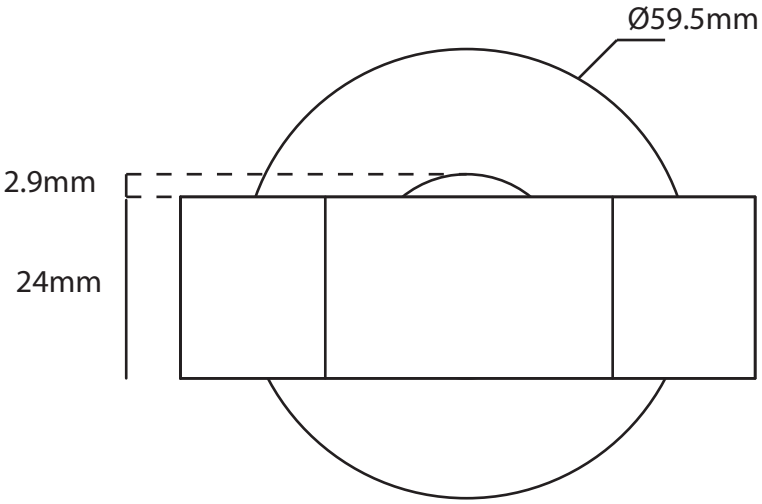

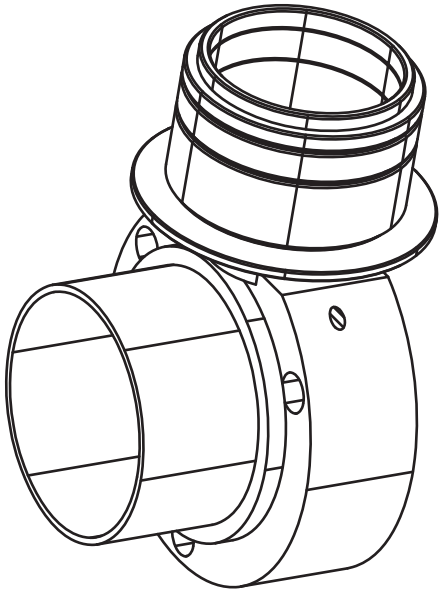

M42 extensions

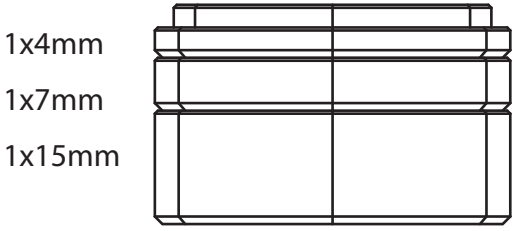

2" adapter

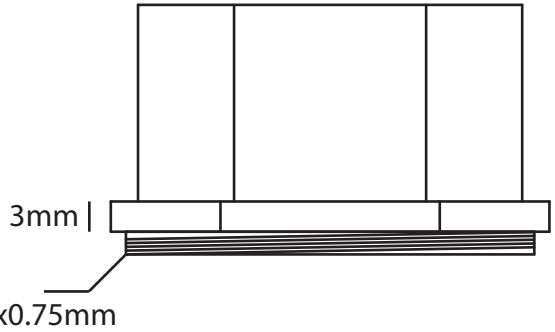

ATIK CAMERAS

Mechanical drawing

Atik OAG